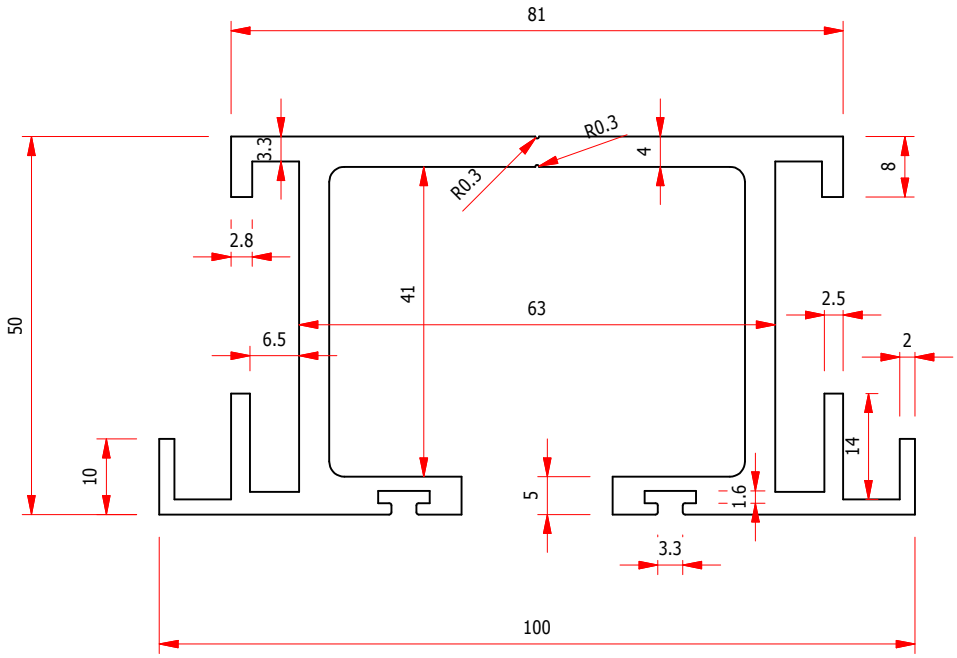

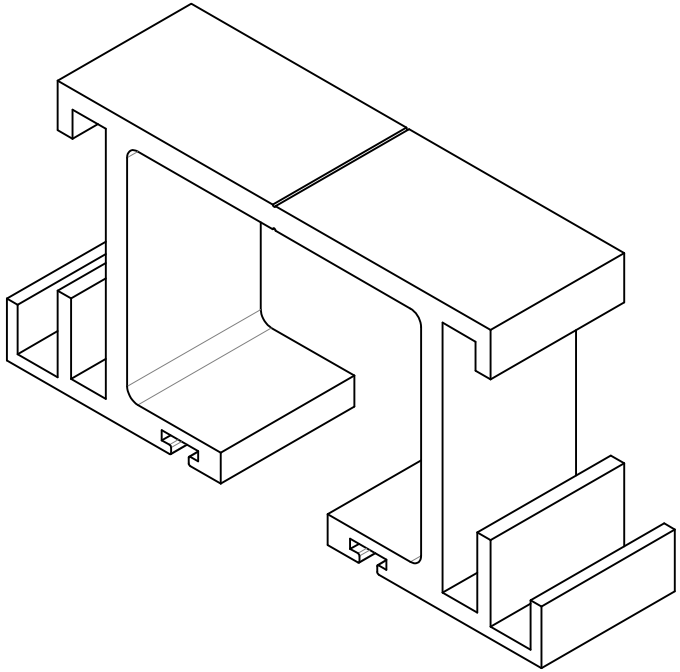

GENERAL TOLERANCES UNLESS OTHERWISE SPECIFIED 0 = +/- 0.5 0.0 = +/- 0.1 0.00 = +/- 0.05	THIRD ANGLE PROJECTION	DESIGNER	REV 2	TRANS-SPACE
		DRAWN Tony W	A3	JOB NAME SS1 Track Details
0.1 ℄ UNLESS OTHERWISE SPECIFIED	DIMENSIONS IN MILLIMETRES	CHECKED 1	SHEET	CONFIGURATION
		DATE 13/09/2013	SCALE AS SHOWN	
MACHINED SURFACE FINISH UNLESS OTHERWISE SPECIFIED 1.6	DESCRIPTION			PART NUMBER

COPYRIGHT TRANS-SPACE Ltd. THESE DRAWINGS AND PRODUCTS MADE THEREFROM ARE SUBJECT TO COPYRIGHT UNDER THE NEW ZEALAND COPYRIGHT ACT 1994 AND NEITHER THE DRAWINGSOR PRODUCTS MADE THEREFROM MAY BE REPRODUCED IN ANY MATERIAL FORM OR MODIFIED IN ANYWAY WITHOUT THE WRITTEN APPROVAL OF TRANS-SPACE Ltd.